EV News 2023 May

Insertion Pad System

TPA-08 and TPA-09 are recommended for slim acetate frames because they are 1-pin type.
Furthermore, the cost is reduced by using stainless steel for the inserting part.

TPA-08

TPA-08

M1.0 and M1.2 are available in both types.

Raw(material color)

Gold(PVD)

Black(PVD)

TPA-08S

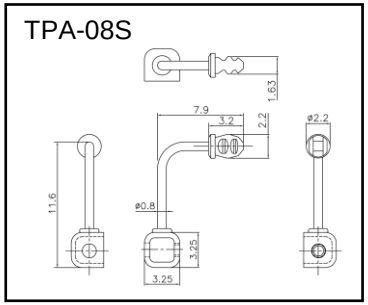

TPA-08M

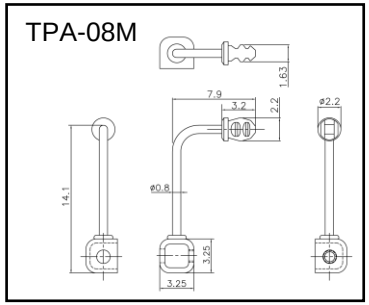

TPA-09(Gooseneck-Shape)

Only M1.2 is available in both types.

Raw(material color)

PVD colors(Gold and Black)
are also available.

TPA-09S

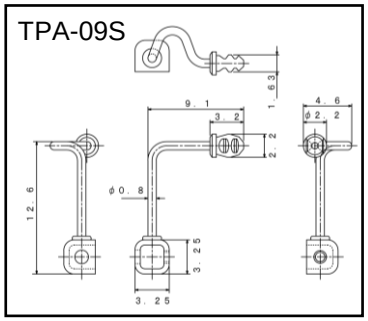

TPA-09M

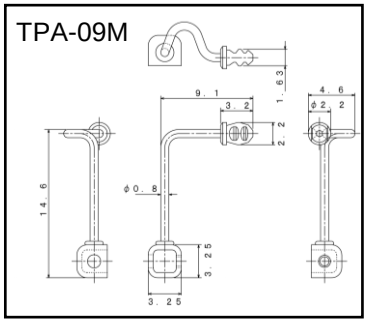

Please feel free to contact us for questions at euro@eurovision.co.jp